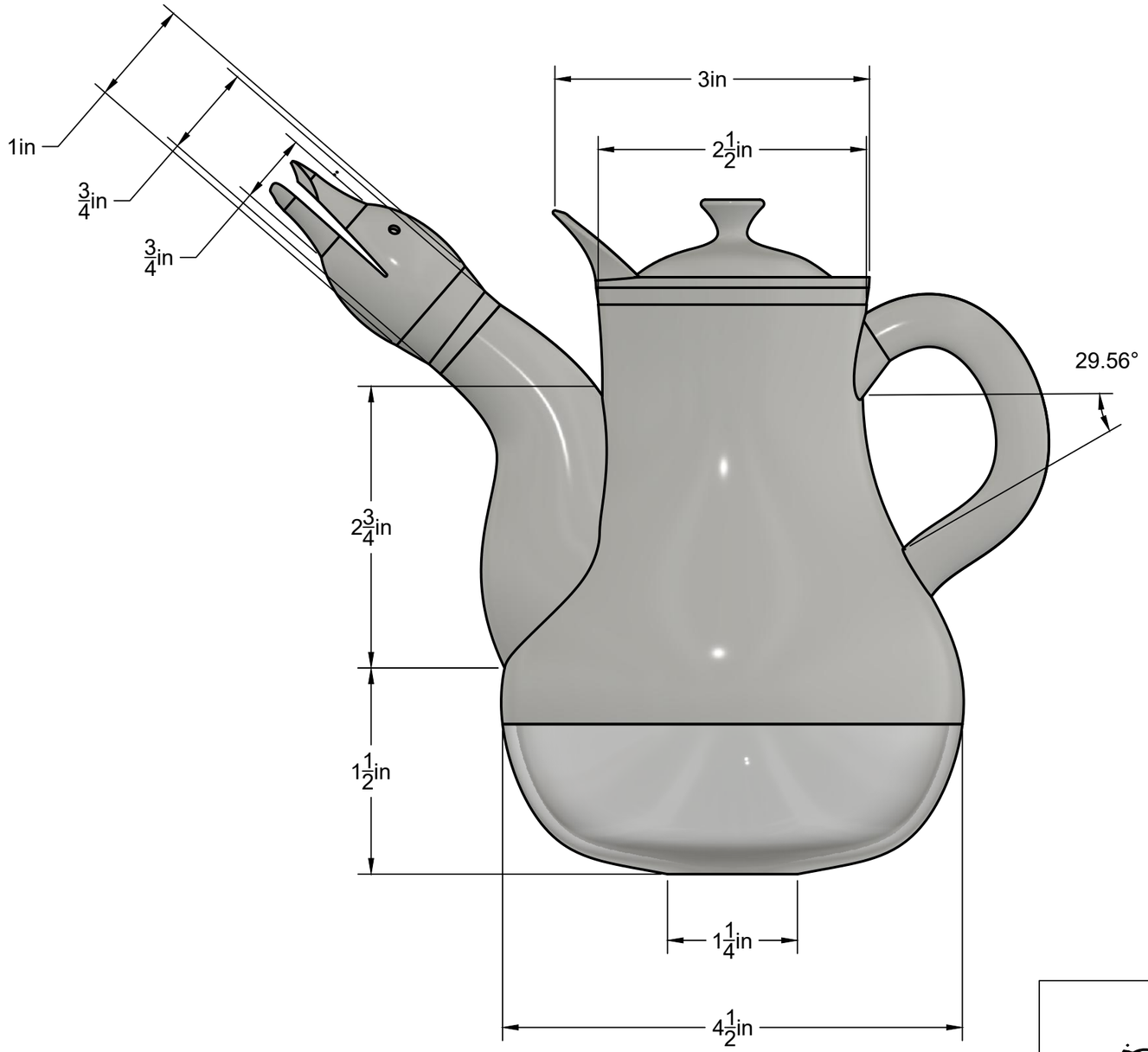

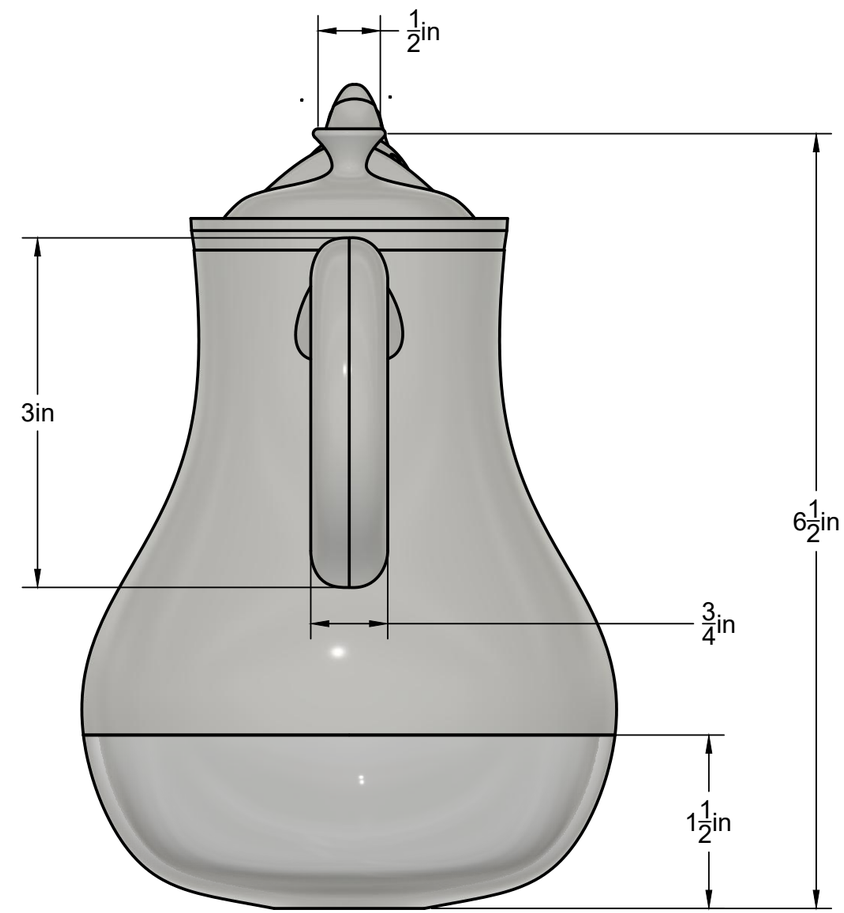

PROJECT Personal Projects					
TITLE Coffee Pot					
APPROVED	SIZE	CODE	DWG NO		REV
CHECKED	B				
DRAWN Alex N 11/2/2018	SCALE 1:1.25	WEIGHT		SHEET 1/1	